310TMS

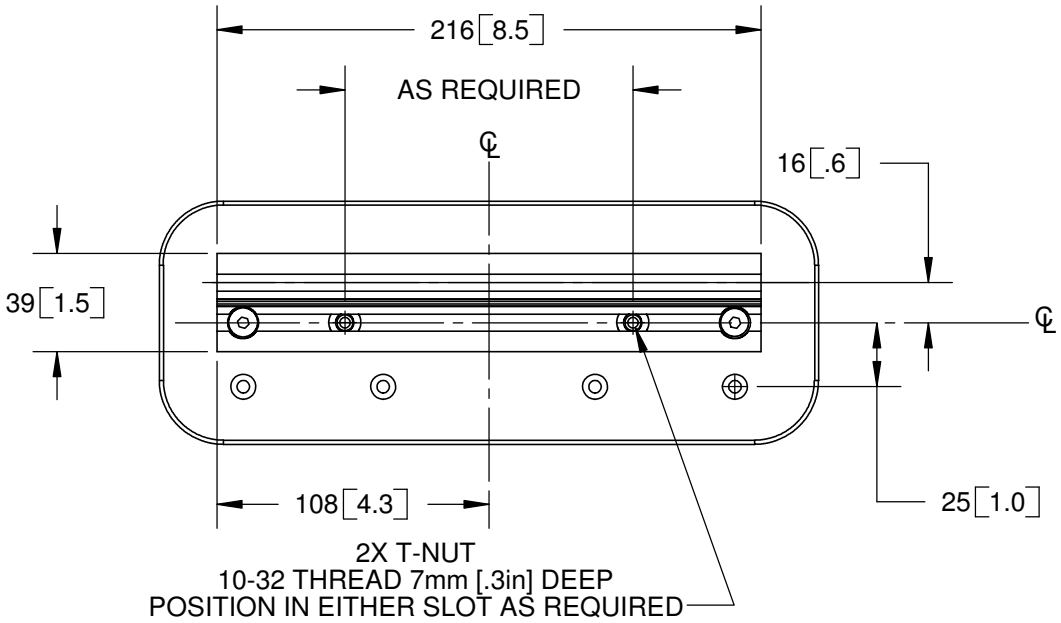

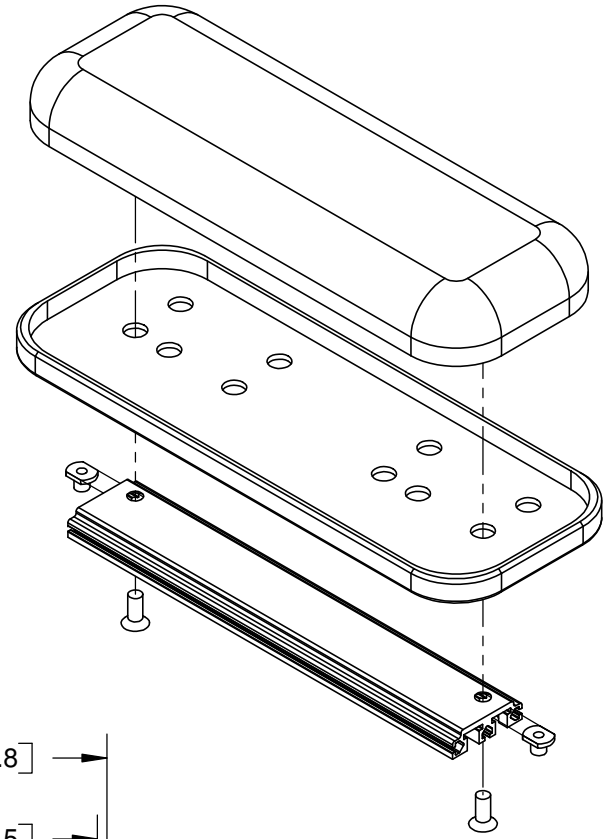

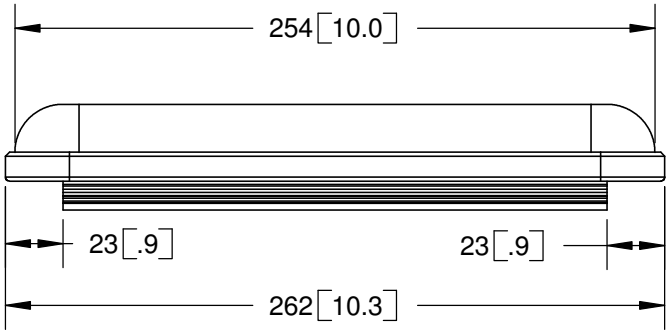

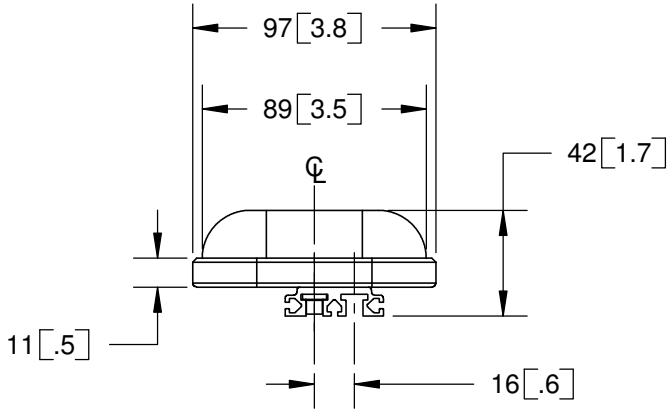

DIMENSIONS IN mm [inches]

GEL OVATIONS